HEKA+ Patient Chair

Nordic DNA - designed for you

Design and patent pending

HEKA+ Patient Chair

- more than just a piece of stylish furniture - it embodies the Danish concept of ‘hygge,’ creating a sense of safety, relaxation, and care for both patients and treatment teams.

When transitioning the patient from a seated to supine position, the chair moves in a smooth, almost floating motion designed to support the body’s natural anatomy, particularly the relationship between the back and neck.

This is achieved through an innovative, patented backrest mechanism that adjusts dynamically throughout the movement.

HEKA+ Patient Chair

To make it easier for patients to get in and out of the chair, the footrest automatically folds down to 90 degrees (knee-break) when the backrest is raised. This feature also allows for optimal face-to-face positioning between the patient and dentist.

The slim, narrow backrest provides the treatment team with the best possible access to the patient, while the chair’s compact design and large height offset ensures ergonomic working positions for both two-handed and four-handed treatments.

The movement of the backrest adapts to each patient, with three pre-programmed settings and additional manual adjustments for further customisation.

The Ergo-Suction footswitch allows the suction to be stopped with a light press, minimizing unnecessary movement and reducing strain on both the dentist and assistant.

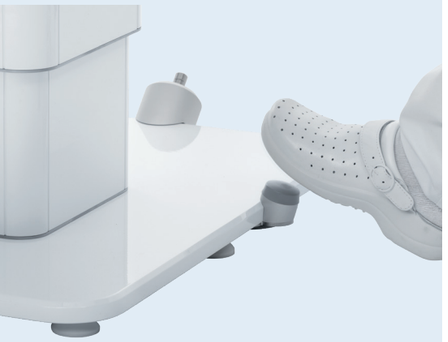

The chair's lifting mechanism maintains a consistent distance between the headrest and surrounding workstations, eliminating the need to readjust the operating light and microscope.

Whether standing or sitting, the HEKA⁺ Patient Chair supports an ideal ergonomic working position, reducing strain and improving efficiency.

A flexible telescopic arm with an assistant element can be added directly to the chair, making it easy to switch between right- and left-handed treatment in seconds, without tools.

This flexibility helps optimize the use of treatment rooms throughout a busy working day.

The HEKA⁺ Patient Chair, when combined with our treatment units, creates an optimal workspace with a simple and flexible treatment flow that both patients and the treatment team will appreciate every day.

When connected to HEKA⁺ treatment units, individual users' settings and treatment positions are automatically transferred to the patient chair.

Make the HEKA+ Patient Chair uniquely yours

There are numerous customization options and possibilities the HEKA+ Patient Chair offers patients and treatment teams - with more being developed every day.

Choose from a range of features and configurations to enhance comfort and efficiency, ensuring the perfect fit for your practice.

In the stand-alone version, the chair can accommodate up to six individual users, each with four personalized treatment positions.

If there's a specific feature or option you require, we're happy to explore new solutions that benefit you and your colleagues.

Horizontal position

Easily removable upholstery

Armrests - up to two

Double articulating neck rest

Telescopic arm mounted on chair

Up to three joysticks

Foot control hanger

Ergo suction

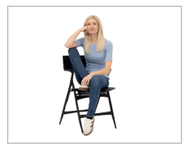

More new options for 2025

The patient chair is designed with advanced technology and ergono-mic features to ensure optimal comfort and flexibility for both the patient and the treatment team.

Features and options:

: Three electric motors
: Approved up to 200 kg
: High lifts for standing treatment
: Horizontal position
: Trendelenburg position
: Double articulating neck rest
: One joystick (up to three joysticks possible)
: Armrest - right and/or left, revolving
: Telescopic arm with suction mounted on the chair
: Foot control hanger

Available options from end of 2025:

: Mobile kit
: Large headrest with hole

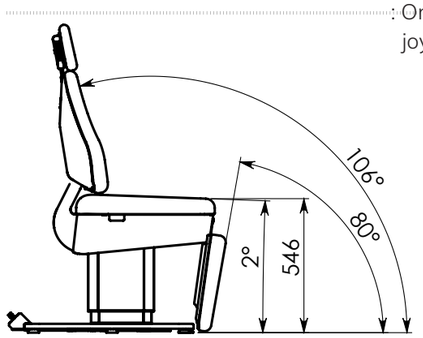

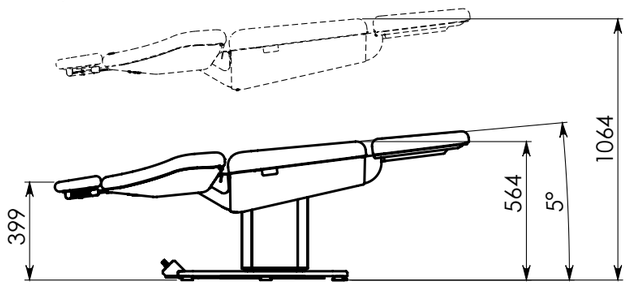

Upholstery and colours

The chair is supplied with Comfort upholstery as standard, offering a supportive and comfortable experience for patients.

For enhanced comfort, **Comfort Premium** is available, featuring memory padding that adapts to the body, providing a super-soft, supportive feel - especially during long treatments.

The surface material is available in three variants:

The upholstery colours are continuously updated. Therefore, use our website to select colours to ensure that the colour you want is available.

Bio Balance

Based on materials made from 80% natural and recyclable raw materials.
Produced using 100% CO_2-neutral energy, reducing the overall carbon footprint.

BB-001 Tea Berry	BB-003 Merlot	BB-004 Marsala	BB-006 Rose	BB-015 Olive Green
BB-020 Sage	BB-023 Atoll	BB-025 Stone Blue	BB-032 Cinder	BB-033 Gobi
BB-034 Concrete	BB-037 Antrachite Bio	BB-038 Black Bio		

Alcohol Resisitant

Designed for easy cleaning with alcohol-based disinfectants such as isopropanol or ethanol, ensuring optimal hygiene.

AR-002 Cherry	AR-011 Sun	AR-016 Dusty Olive	AR-017 Lime	AR-022 Deep Sea
AR-029 White	AR-030 Pearl	AR-031 Chestnut	AR-036 Antrachite	AR-039 Black

Trend Colours

Available in a range of colours to help create a welcoming and comfortable atmosphere in treatment rooms.

TC-007 Cyclame	TC-008 Orchidee	TC-009 Violett	TC-013 Karneol	TC-014 Orange Sun
TC-018 Apple Green	TC-019 Aqua	TC-021 Ocean	TC-026 Bleu	TC-027 Dolphin

HEKA
DENTAL®

Designed and manufactured in our own factory in Denmark, the HEKA+ Patient Chair reflects our commitment to innovation, craftsmanship, and quality.

Take a behind-the-scenes look at our modern facilities and discover how we are shaping the future of dental units with solutions tailored to your needs.

HEKA
Factory Tour

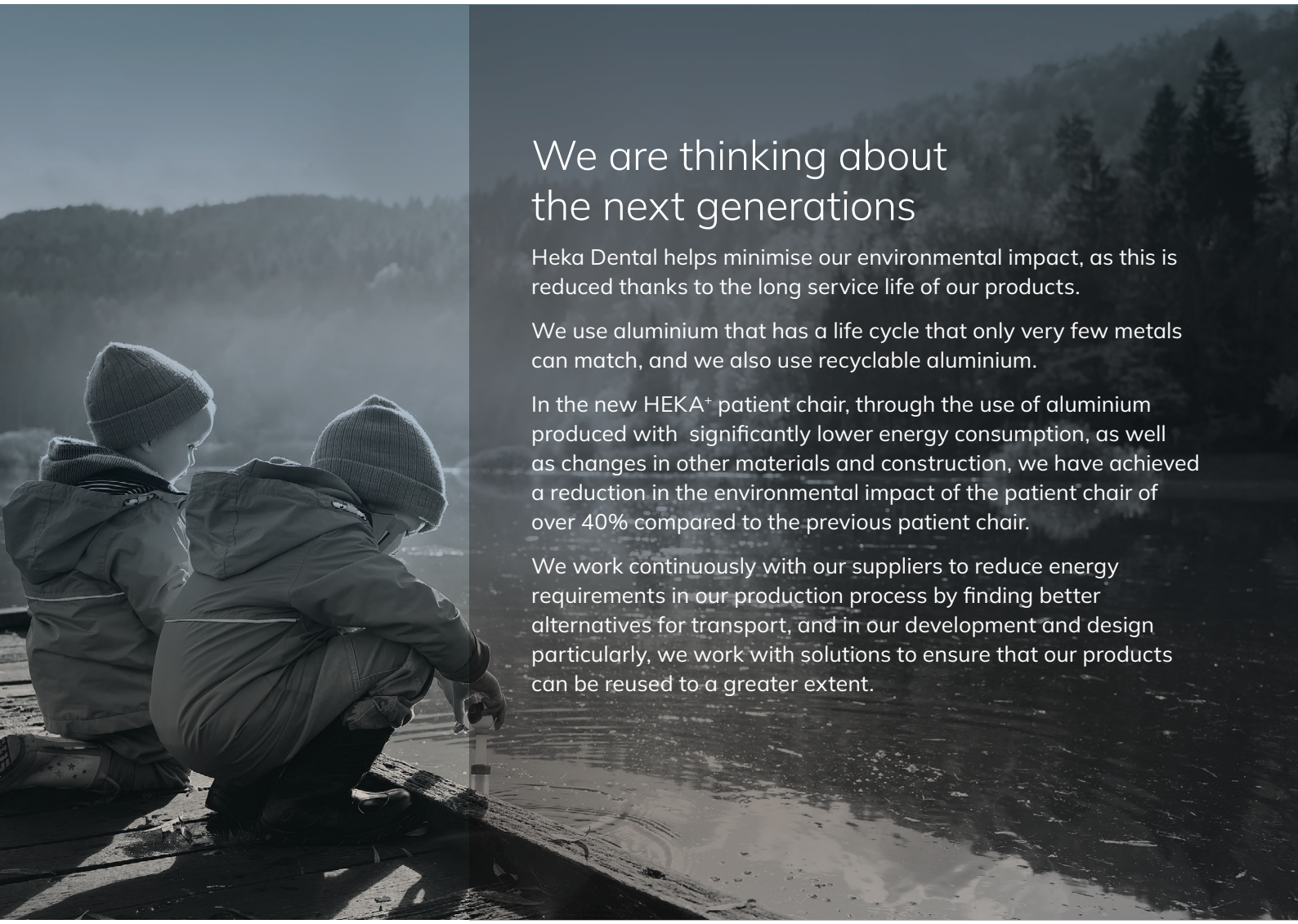

We are thinking about the next generations

Heka Dental helps minimise our environmental impact, as this is reduced thanks to the long service life of our products.

We use aluminium that has a life cycle that only very few metals can match, and we also use recyclable aluminium.

In the new HEKA+ patient chair, through the use of aluminium produced with significantly lower energy consumption, as well as changes in other materials and construction, we have achieved a reduction in the environmental impact of the patient chair of over 40% compared to the previous patient chair.

We work continuously with our suppliers to reduce energy requirements in our production process by finding better alternatives for transport, and in our development and design particularly, we work with solutions to ensure that our products can be reused to a greater extent.

Design and patent pending
Subject to changes and misprints as well as colour shades
33041 - 10/2026

Heka Dental A/S
Litauen Alle 4
DK-2630 Taastrup
Denmark
T: +45 4332 0990
M: info@heka-dental.dk
heka-dental.com

Homepage Facebook LinkedIn Instagram